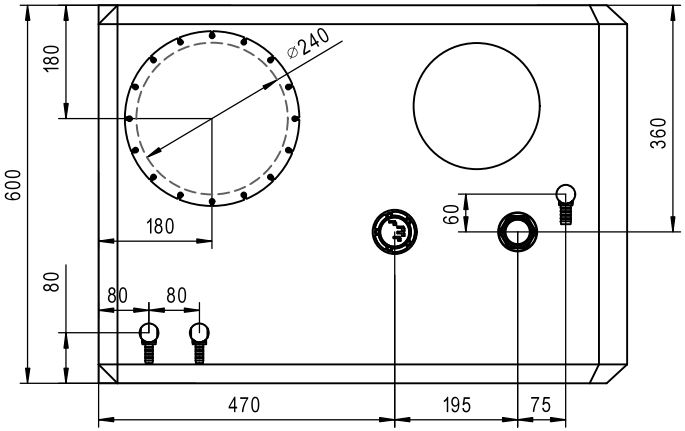

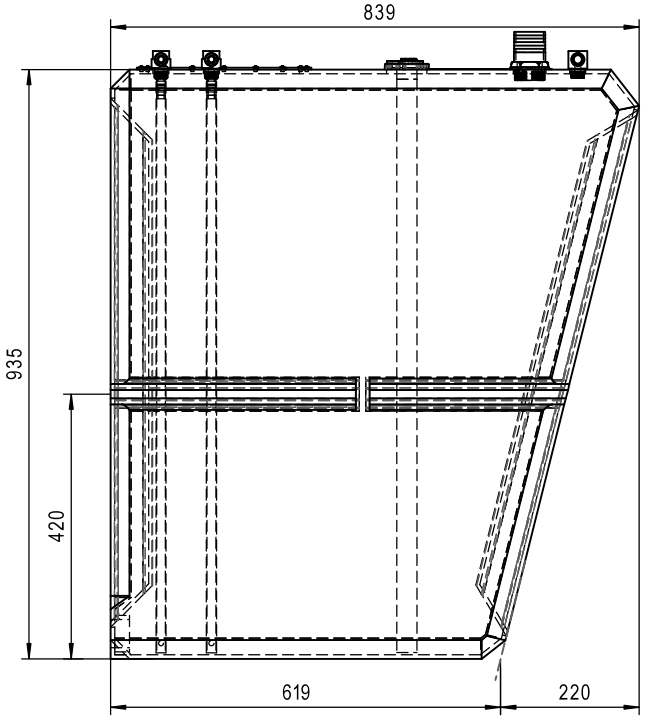

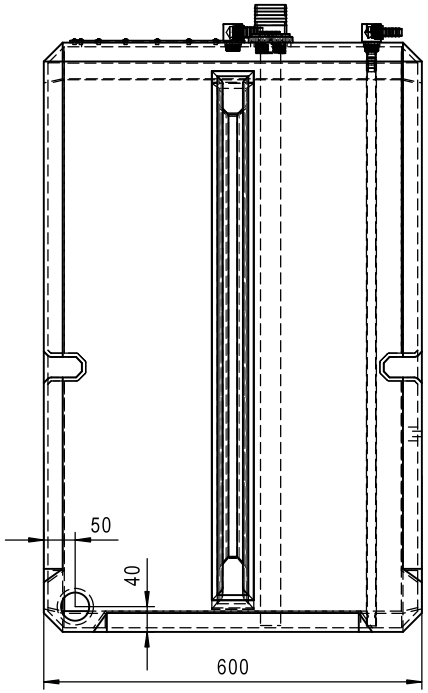

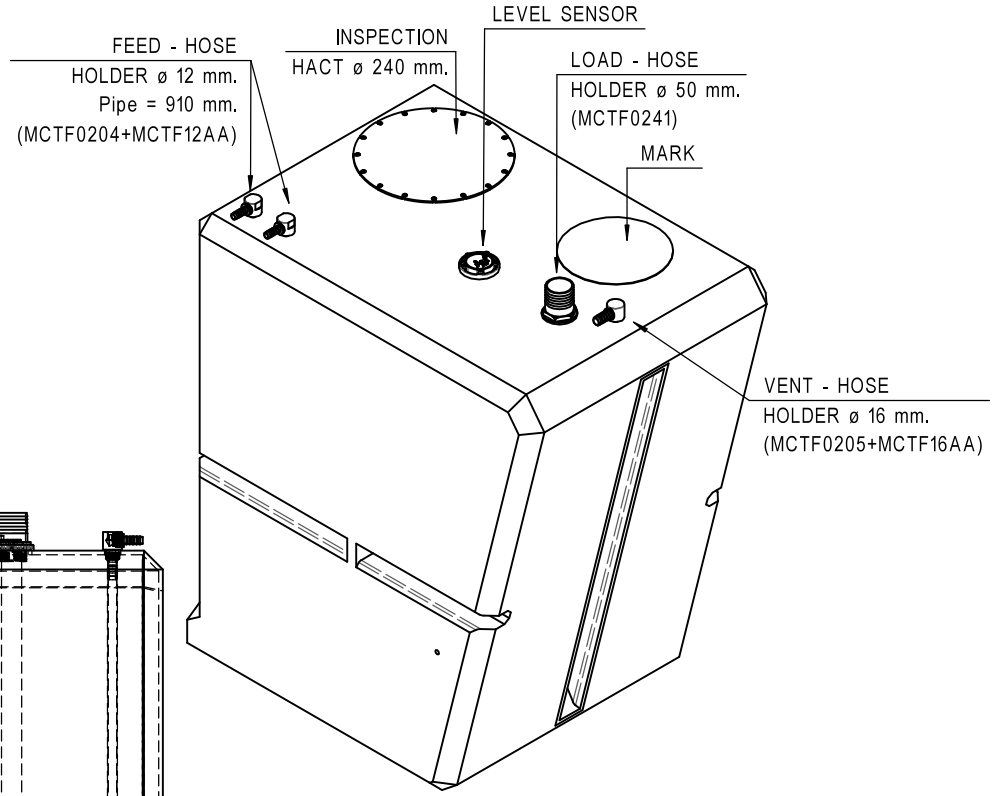

General geometrical tolerances ISO 2768-mK. Theoretically exact dimensions not shown derived from 3D CAD

PROJECT: Diesel tank 375 litres			PART NUMBER: -	DRAWN BY: F. DANESE
				APPROVED BY: G. AGUGLIA
DESCRIPTION: Diesel tank 375 litres			DIMENSIONS IN MM	DATE: 23/04/2026
MATERIAL: XLPE	WEIGHT: 21 kg.	AVG THICKNESS: 7,5 mm.	TYPE: -	STERN → BOW
	SHEET: 1/1	FORMAT: A4	REV.: 1	

SIG DIVISIONE ELETTRONICA

DESIGN PROPERTY OF SIC DIVISIONE ELETTRONICA Srlu: REPRODUCTION, DUPLICATION TO THIRD PARTIES AND ANY OTHER USE THAT HAS NOT BEEN AUTHORIZED IN WRITING IS PROHIBITED