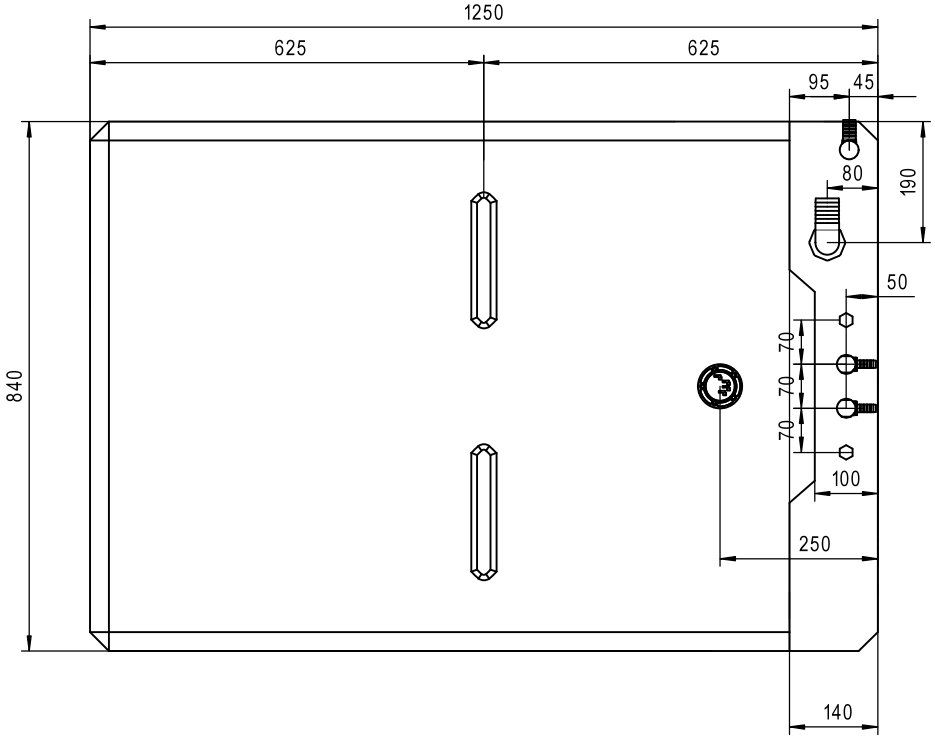

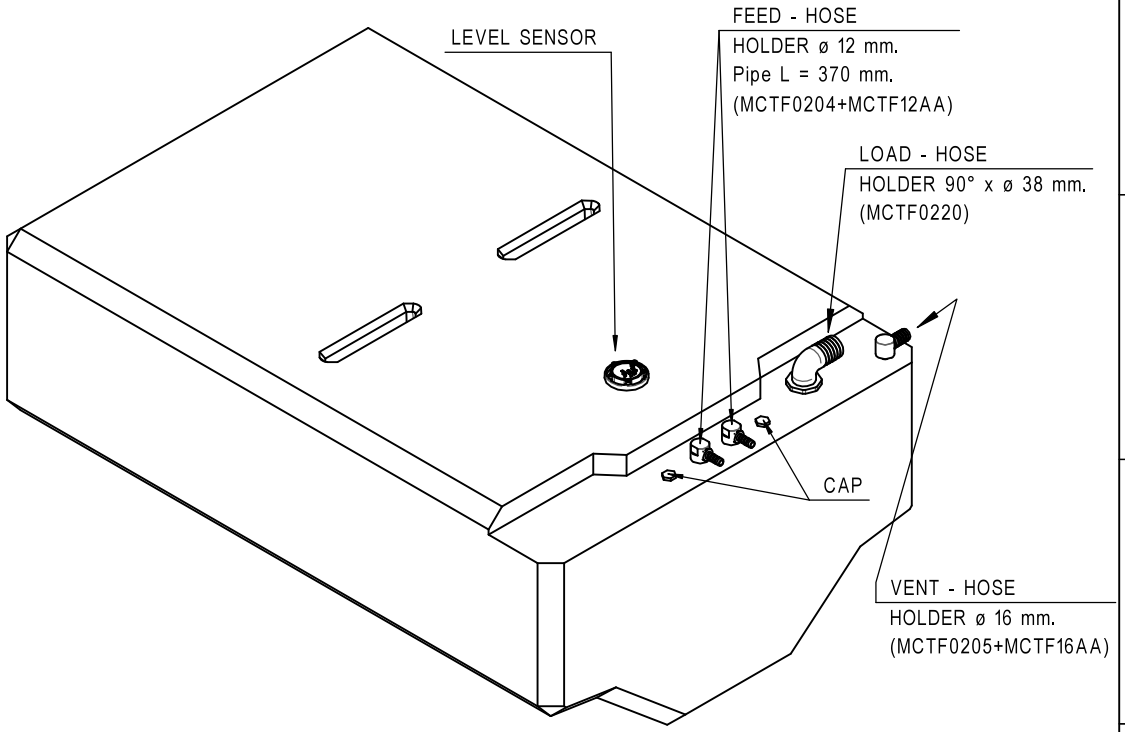

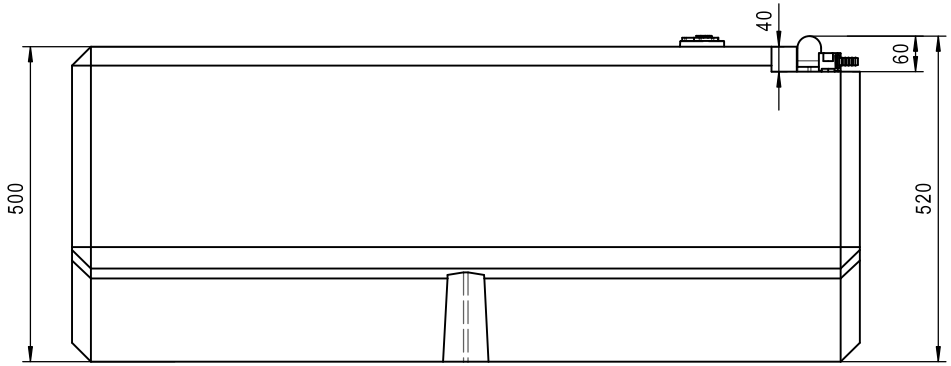

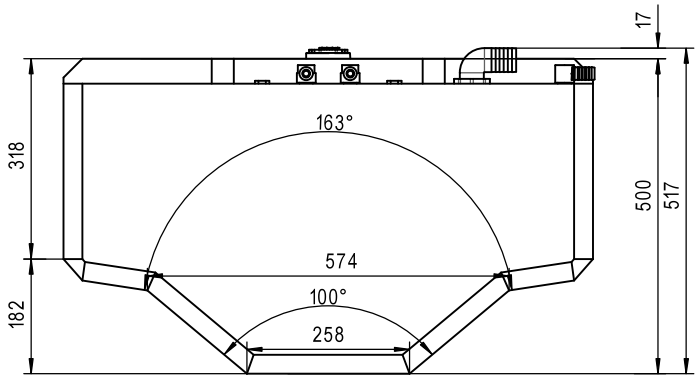

HPSB0091-DX

PCSR0225

General geometrical tolerances ISO 2768-mK. Theoretically exact dimensions not shown derived from 3D CAD

PROJECT HPSB0091-DX Gasoline tank 407 litres			PART NUMBER -	DRAWN BY F. DANESE
DESCRIPTION HPSB0091-DX Gasoline tank 407 litres			DIMENSIONS IN MM	APPROVED BY G. AGUGLIA DATE 16/03/2026
MATERIAL XLPE	WEIGHT 28 kg.	AVG THICKNESS 7,5 mm.	TYPE -	STERN → BOW
	SHEET 1 / 1	FORMAT A4	REV. 0	

SIC DIVISIONE ELETTRONICA

DESIGN PROPERTY OF SIC DIVISIONE ELETTRONICA Srlu: REPRODUCTION, DUPLICATION TO THIRD PARTIES AND ANY OTHER USE THAT HAS NOT BEEN AUTHORIZED IN WRITING IS PROHIBITED