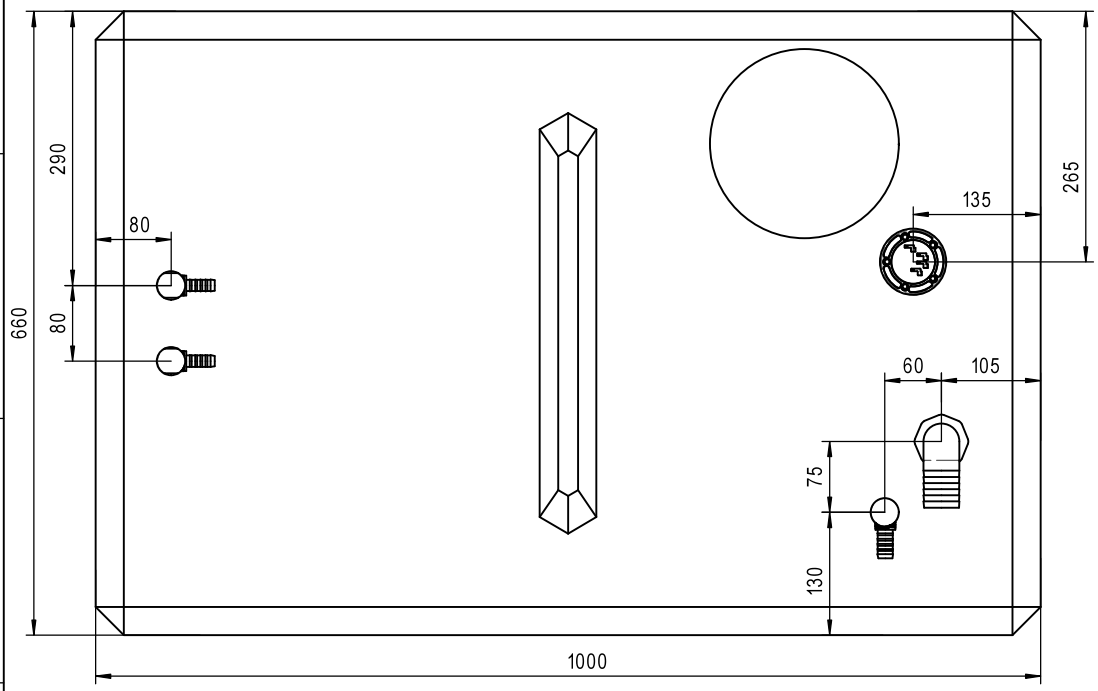

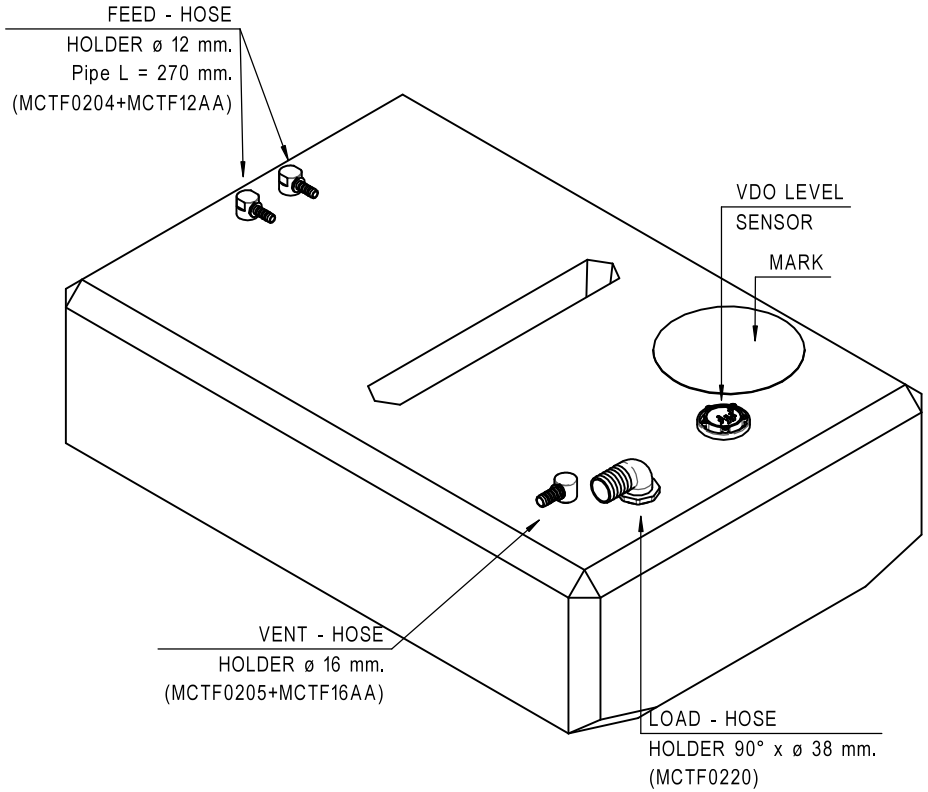

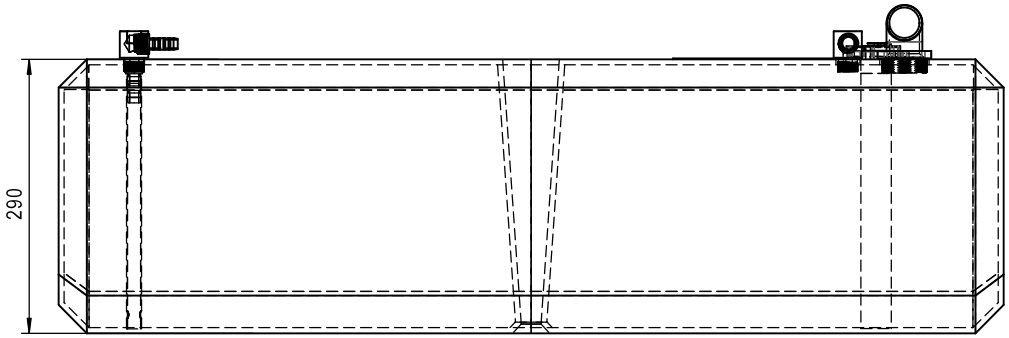

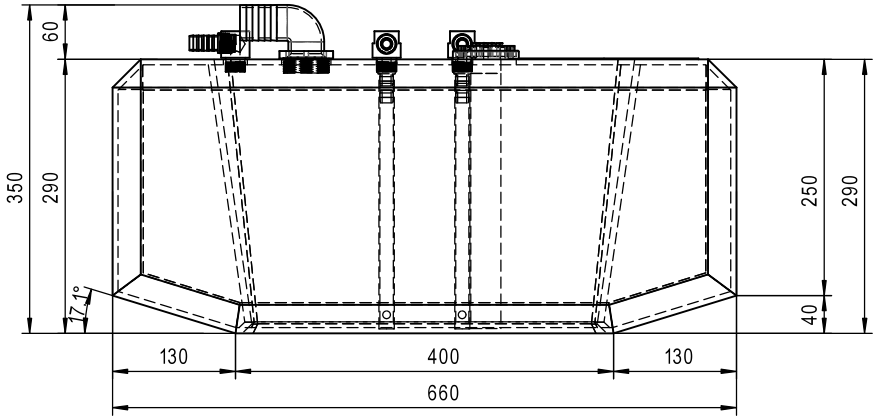

HPSB0105

PCSR0192

General geometrical tolerances ISO 2768-mK. Theoretically exact dimensions not shown derived from 3D CAD

PROJECT HPSB0105 Gasoline tank 166 litres		PART NUMBER -	DRAWN BY F. DANESE
DESCRIPTION HPSB0105 Gasoline tank 166 litres		DIMENSIONS IN MM	APPROVED BY G. AGUGLIA DATE 14/04/2026
MATERIAL XLPE	WEIGHT 16 kg.	AVG THICKNESS 6 mm.	TYPE -
	SHEET -	FORMAT A4	REV. 1

STERN BOW

SIC DIVISIONE ELETTRONICA

DESIGN PROPERTY OF SIC DIVISIONE ELETTRONICA Srlu: REPRODUCTION, DUPLICATION TO THIRD PARTIES AND ANY OTHER USE THAT HAS NOT BEEN AUTHORIZED IN WRITING IS PROHIBITED