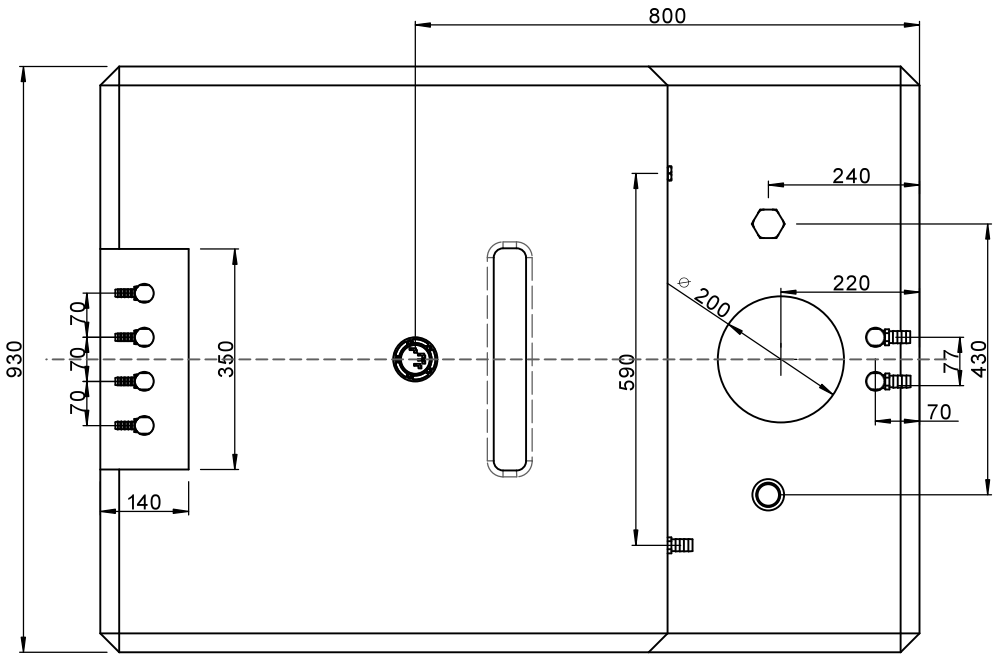

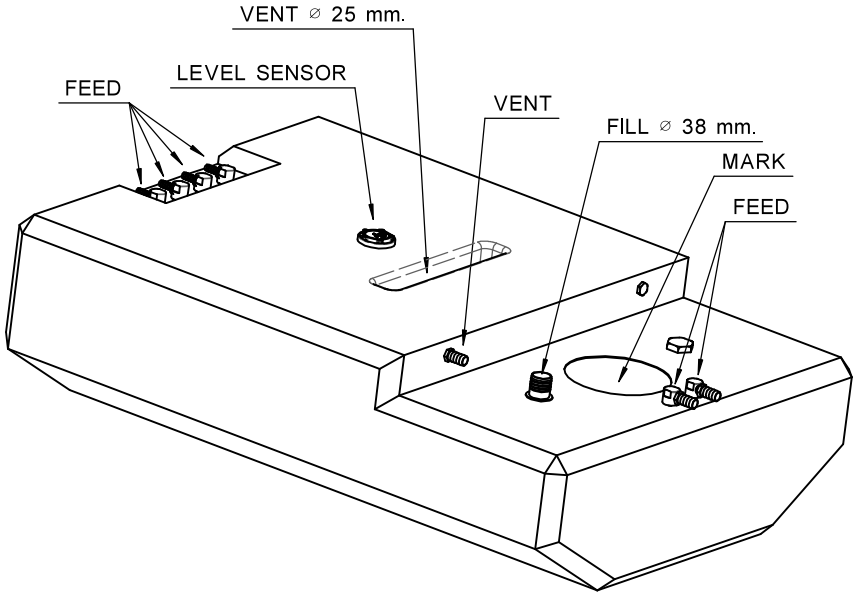

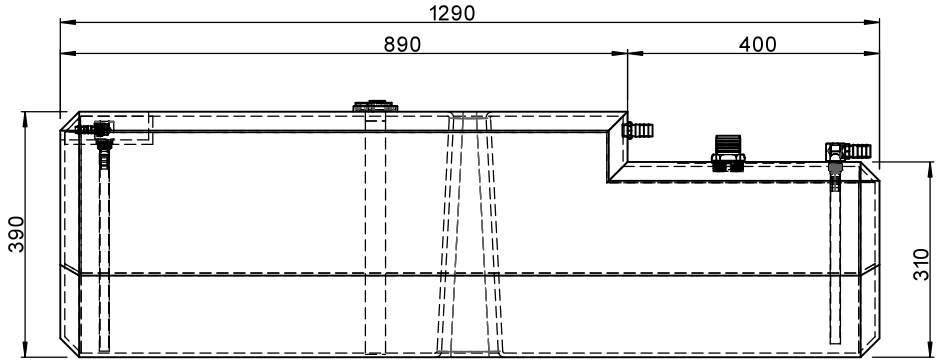

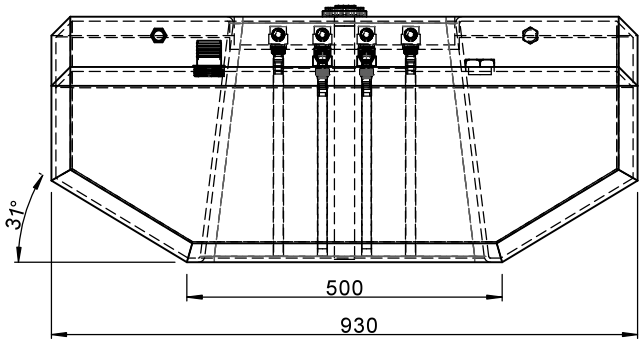

Project: HPSR0014-GAS Tank 370 Litres		DRAWN BY: F. DANESE
Description: Gasoline Tank 370 Litres Thikness 7,5 mm. - 26.4 kg		APPROVED BY: G. AGUGLIA
Material: XLPE	Scala: Out of scale	
	Rev.: 27/11/2025	

SIG DIVISIONE ELETTRONICA

HPSR0014