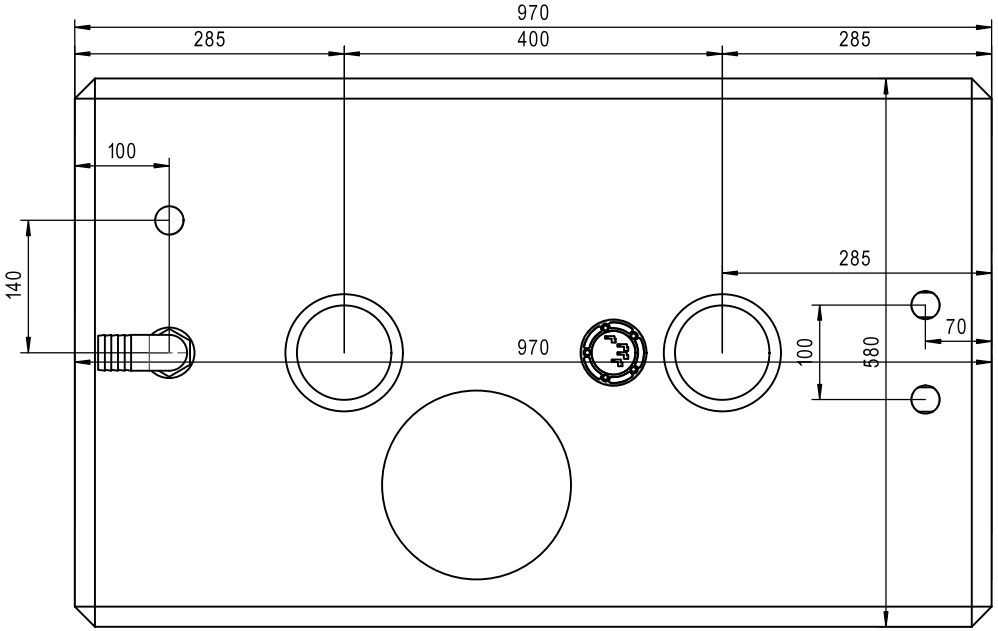

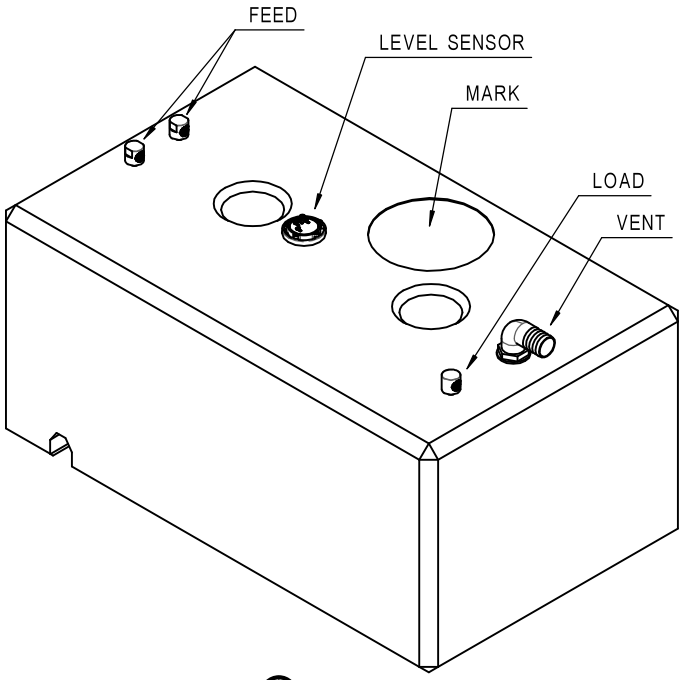

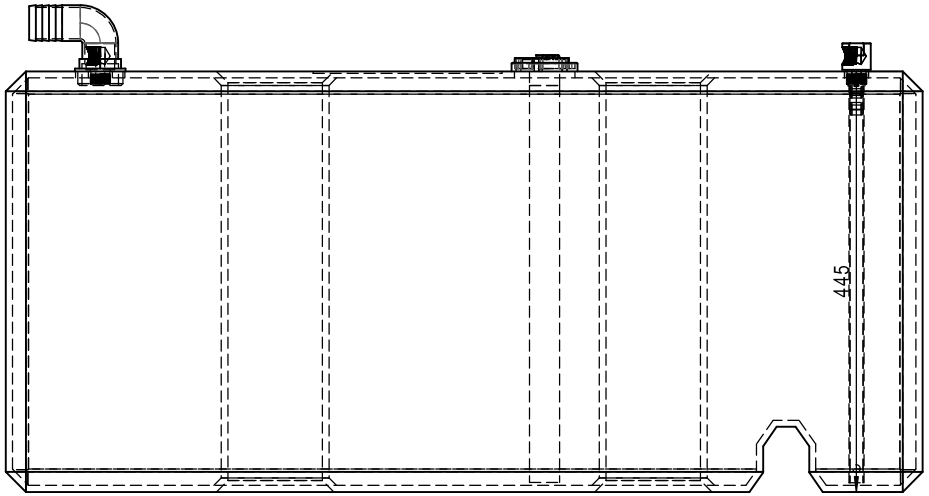

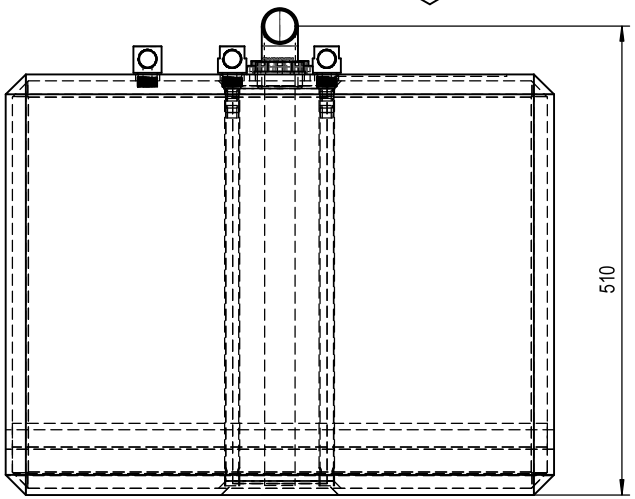

HPSB0181-GAS

General geometrical tolerances ISO 2768-mK. Theoretically exact dimensions not shown derived from 3D CAD

PROJECT HPSB0181-GAS Gasoline tank 235 litres		PART NUMBER -	DRAWN BY F. DANESE
			APPROVED BY G. AGUGLIA
DESCRIPTION HPSB0181-GAS Gasoline tank 235 litres		DIMENSIONS IN MM	DATE 19/05/2026
MATERIAL XLPE	WEIGHT 17,4 kg.	THICKNESS 7,5 mm.	TYPE -
	SHEET -	FORMAT A4	REV. 1

STERN BOW

SIC DIVISIONE ELETTRONICA

DESIGN PROPERTY OF SIC DIVISIONE ELETTRONICA Srlu: REPRODUCTION, DUPLICATION TO THIRD PARTIES AND ANY OTHER USE THAT HAS NOT BEEN AUTHORIZED IN WRITING IS PROHIBITED